Air Lubricator (SAL)

SAL100~600 Series



SAL100 SAL200 SAL300 SAL400 SAL600

How to order

SAL 4 00 - 04 B - MeP

① Air Lubricator

② **Body Size**
1 - 1/8
2 - 1/4
3 - 3/8
4 - 1/2, 3/4
6 - 1

③ **Thread type**
Nil - Rc(PT)
N - NPT
G - G(PF)

④ **Port Size**

Symbol	Size	Body size				
		1	2	3	4	6
M5	M5	●				
01	1/8		●			
02	1/4		●	●		
03	3/8			●		
04	1/2				●	
06	3/4				●	●
10	1					●

⑤ **Accessory(Optional)**
Nil - None Bracket
B - Bracket

⑥ **Bowl**
Nil - PC bowl
MeP - Metal bowl with pipe type sight glass

Symbol

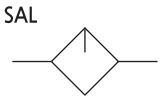

Specification

Fluid	Compressed Air
Max. operating pressure	10bar (1.0MPa)
Max. supply pressure	15bar (1.5MPa)
Ambient and Media temp.	-5~60℃ (No freezing)
Recommended oil	Turbin oil (ISO VG32)
Bowl material	Poly-carbonate (option: ALDC)

Precautions

① Do not use Poly-carbonate bowls in an environment where they are exposed to or come in contact with organic solvents, chemicals, cutting oil, synthetic oil, alkali, and thread lock solutions.

② Do not introduce air from the outlet side as this can damage the damper.

③ Use a check valve (SACM series) to prevent back flow of the lubricant when redirecting the air flow before the lubricator.

④ Avoid riser piping and branch lines on the outlet side to prevent inferior lubrication.

⑤ Adjustment of the oil regulating valve should be carried out manually. Turning it counterclockwise increases the dripping amount, and turning it clockwise reduces the dripping amount.

⑥ Check the usage rate once a day. If the lubricant is not normally consumed, problems may occur to the lubricated objects.

FLOW CHARACTERISTICS

SAL 200

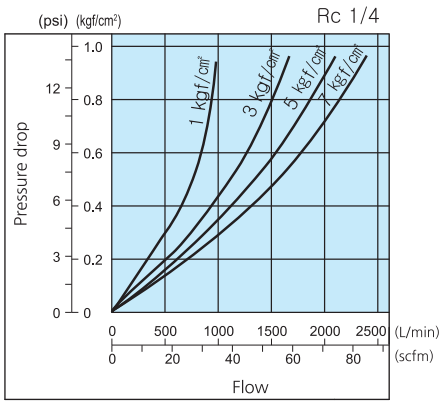

SAL 300

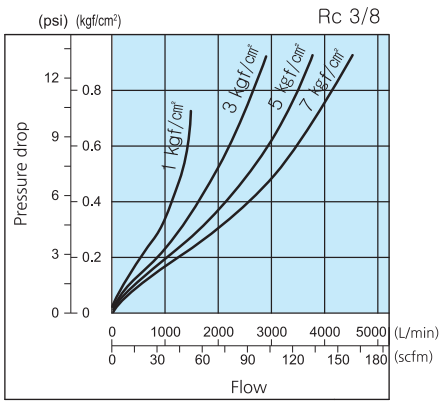

SAL 400-04

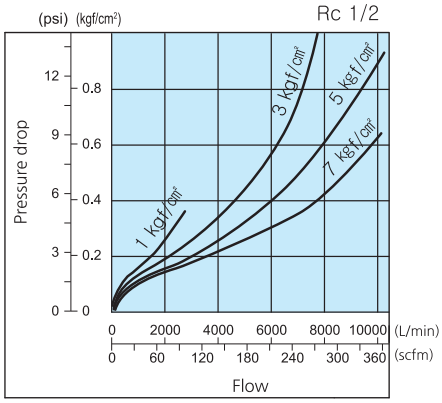

SAL 400-06

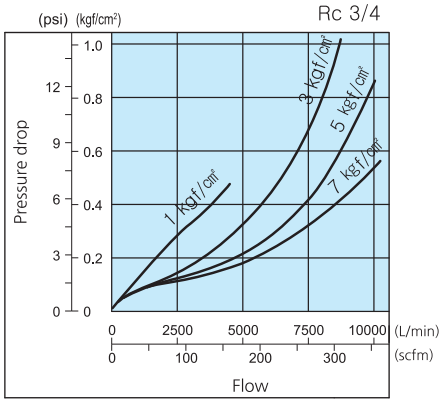

SAL 600

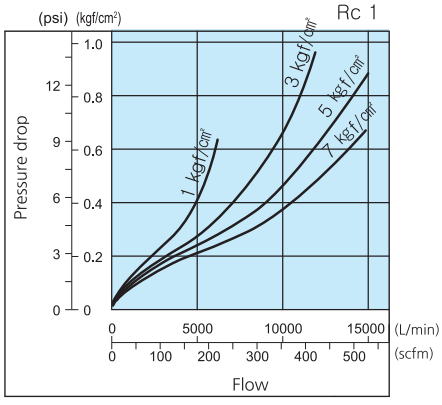

STRUCTURE / PARTS

SAL100

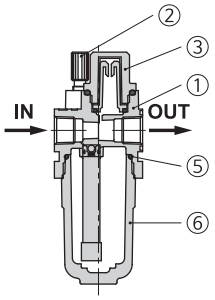

SAL300, SAL400

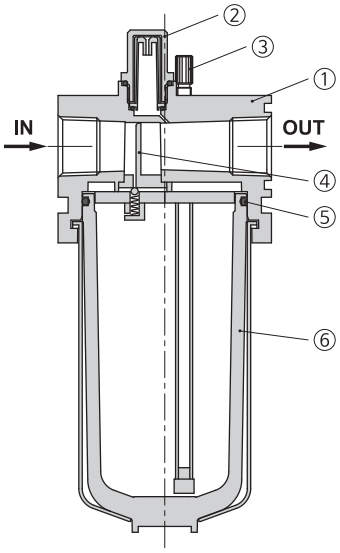

SAL600

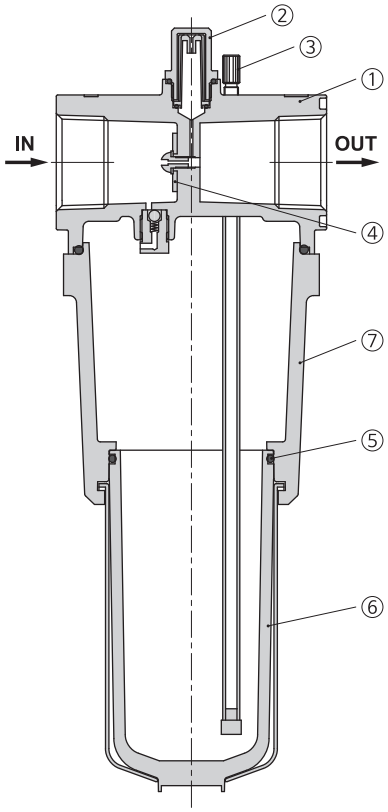

SAL200

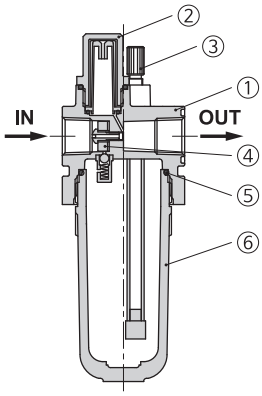

▪ Component Parts

No.	PARTS	MATERIAL
①	Body	ALDC
②	Oil cap	Nylon
③	Throttle screw	Bs
④	Damper Ass'y	Ur, NBR
⑥	Bowl Ass'y [1)]	PC
⑦	Housing	ALDC

1) Bowl Ass'y for the SAL300 to SAL600 models comes with a bowl guard (steel band material).

▪ Replacement Parts

No.	PARTS	MATERIAL	Part no.				
			SAL100	SAL200	SAL300	SAL400	SAL600
⑤	O-ring	NBR	S22	U024	38x2	U137	U137

DIMENSIONS (mm)

SAL 100

■ SAL100-□01(M5)

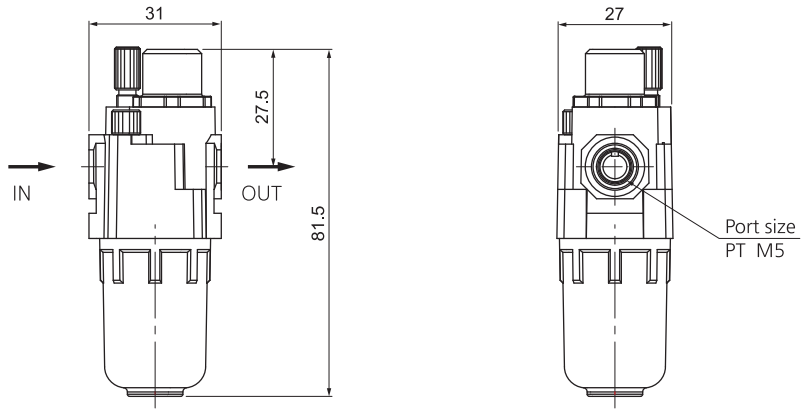

DIMENSIONS (mm)

SAL 200

■ SAL200-□02□

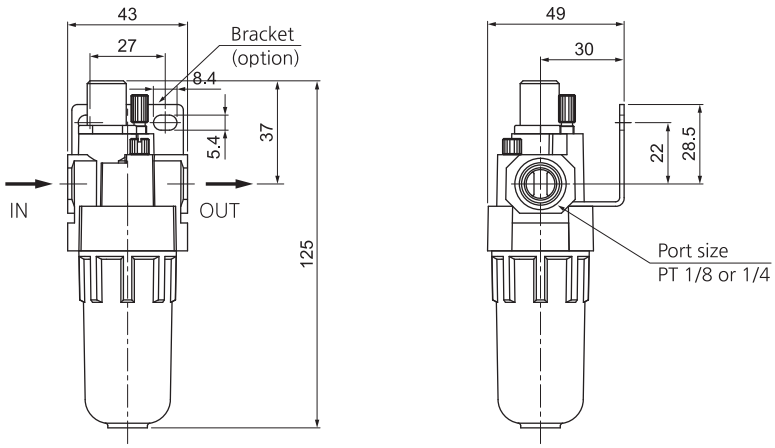

■ Dimensions of each model with an option attached

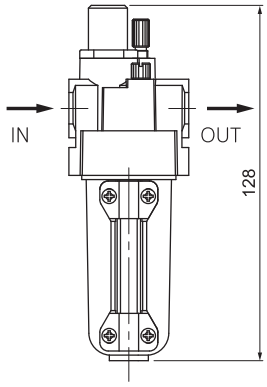

Metal bowl type

Option	**B** : Bracket
Model	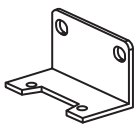 B200

DIMENSIONS (mm)

SAL 300~400

■ SAL300-□03□□
SAL400-□04(06)□□

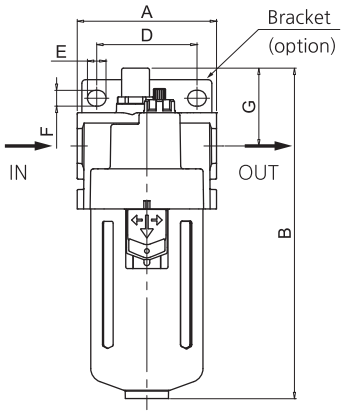

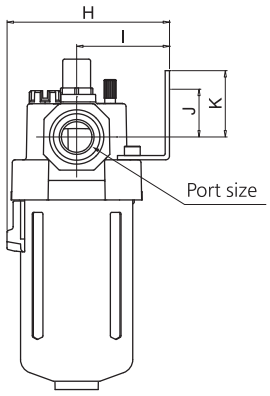

■ Dimensions of each model with an option attached

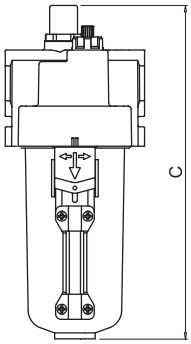

Metal bowl type

Option	B : Bracket
Model	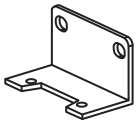 SAL300 : B300 SAL400 : B400

Model	Port size	A	B	C	D	E	F	G	H	I	J	K
SAL300-03	1/4, 3/8	57	147	160	40	7.9	6.3	14	65	36.5	14	21
SAL400-04	1/2	75	177.5	177	54	10	8.5	41.9	85	50	25.7	35.7
SAL400-06	3/4	75	181.5	181	54	10	8.5	43.8	85	50	25.1	35.1

DIMENSIONS (mm)

SAL 600

■ SAL600-□06□□
SAL600-□10□□

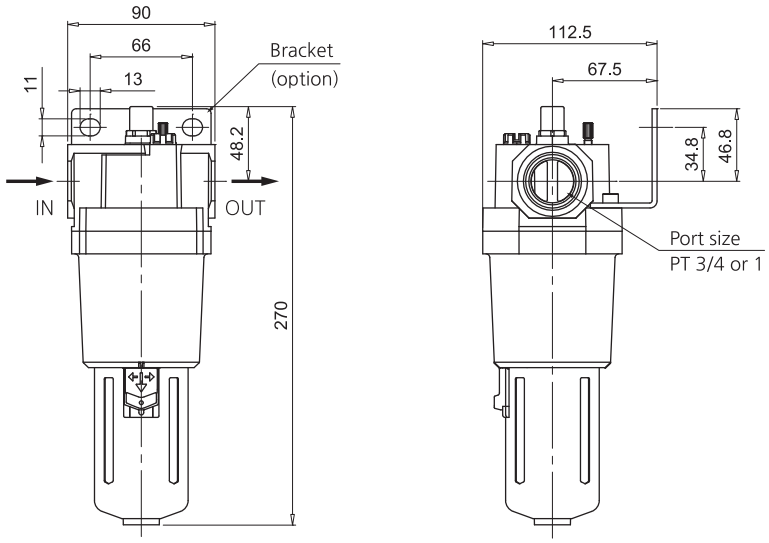

■ Dimensions of each model with an option attached

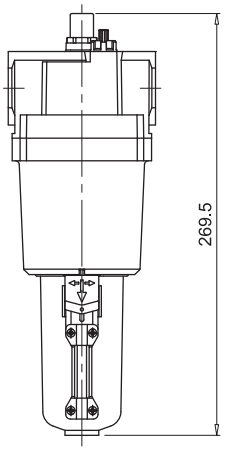

Metal bowl type

Option	B : Bracket
Model	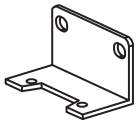 B600