Spool type Mechanical Valve (SMVS)

SMVS230 Series (Rc(PT) 1/4)



How to order

SMVS 2 3 0 - ○ 02 - 00

① Spool type Mechanical Valve

② **Number of Port**
3 - 3 Port

③ **Thread type**
Nil - Rc(PT)
N - NPT
G - G(PF)

④ **Port size**
01 - 1/4

⑤ **Type of Actuator**
00 - Standard
01S - Roller lever(Bearing type)
02S - One way roller lever(Bearing type)
30 - Push button(Mushroom type)
31 - Push button(ENG type)
32 - Push button(Flat type)
34 - Selector(2position)

Symbol



Specification

Fluid	Compressed Air
Max. operating pressure	0~10bar (0~1MPa)
Ambient and Media temp.	-5~60℃ (No freezing)
Lubrication	Not required
Port size	1/4

Operating point of Mechanical valve

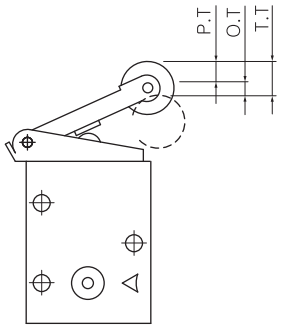

P.T.	From the free position to the operating position of actuator
O.T.	From the operating position to the operating limit of actuator
T.T.	From the free position to the operating limit of actuator

STRUCTURE / PARTS

SMVS 230

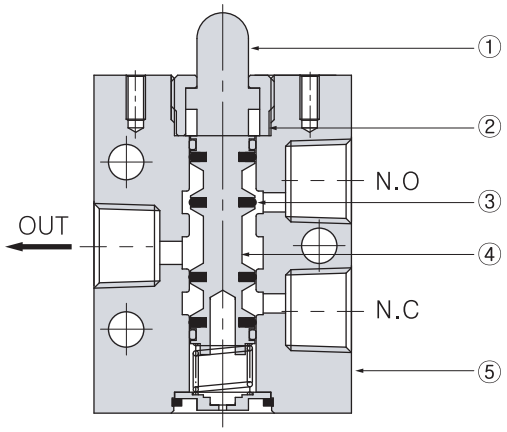

No.	PARTS	MATERIAL
①	Rod	SUS
②	Rod guide	Brass
③	I-ring	NBR
④	Spool	Al
⑤	Body	ALDC

DIMENSIONS (mm)

SMVS 230-02-00

P.T.	1.8
O.T.	2.2
T.T.	4

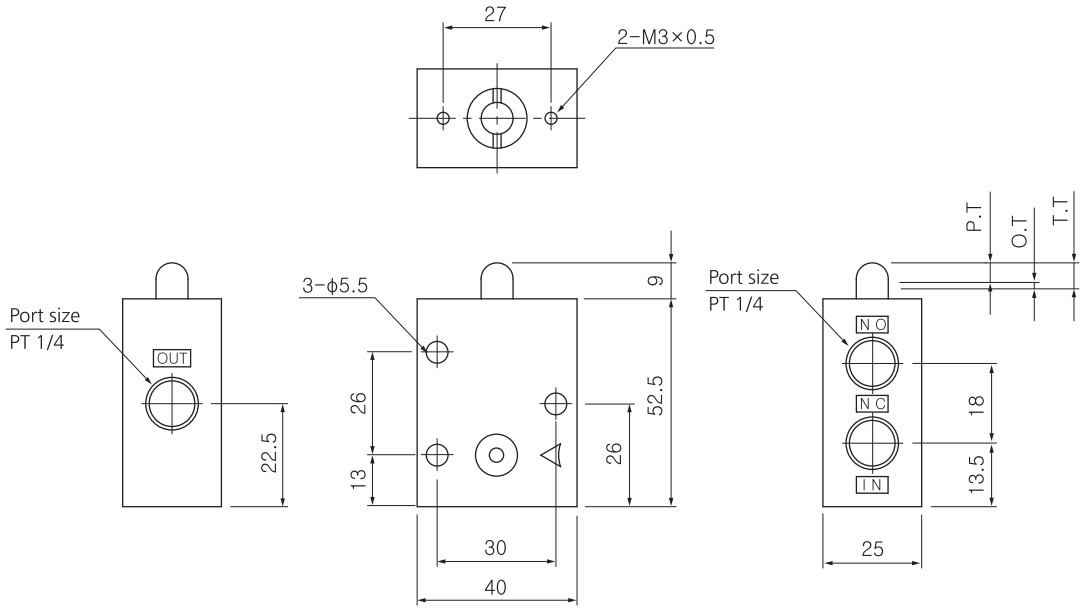

DIMENSIONS (mm)

SMVS 230-02-01S

P.T.	4
O.T.	5
T.T.	9

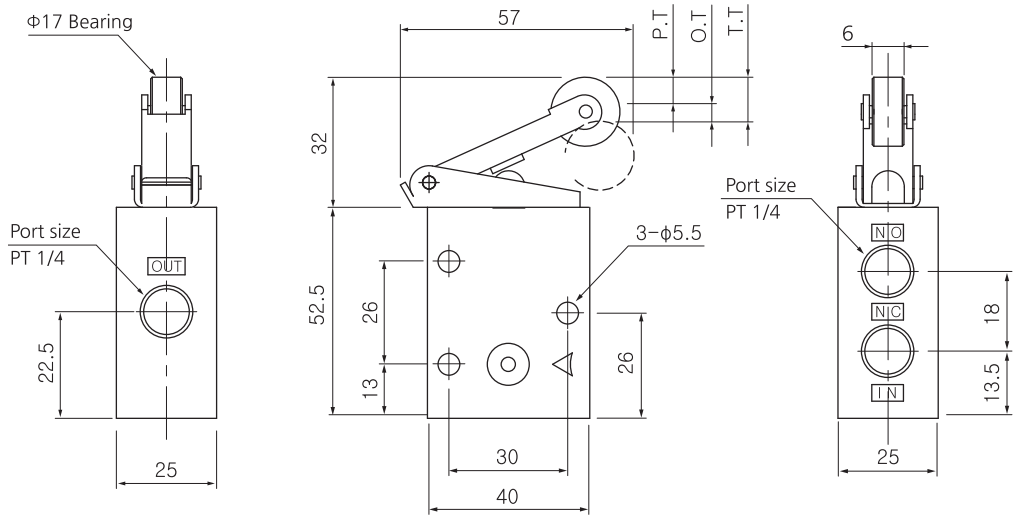

SMVS 230-02-02S

P.T.	4
O.T.	5
T.T.	9

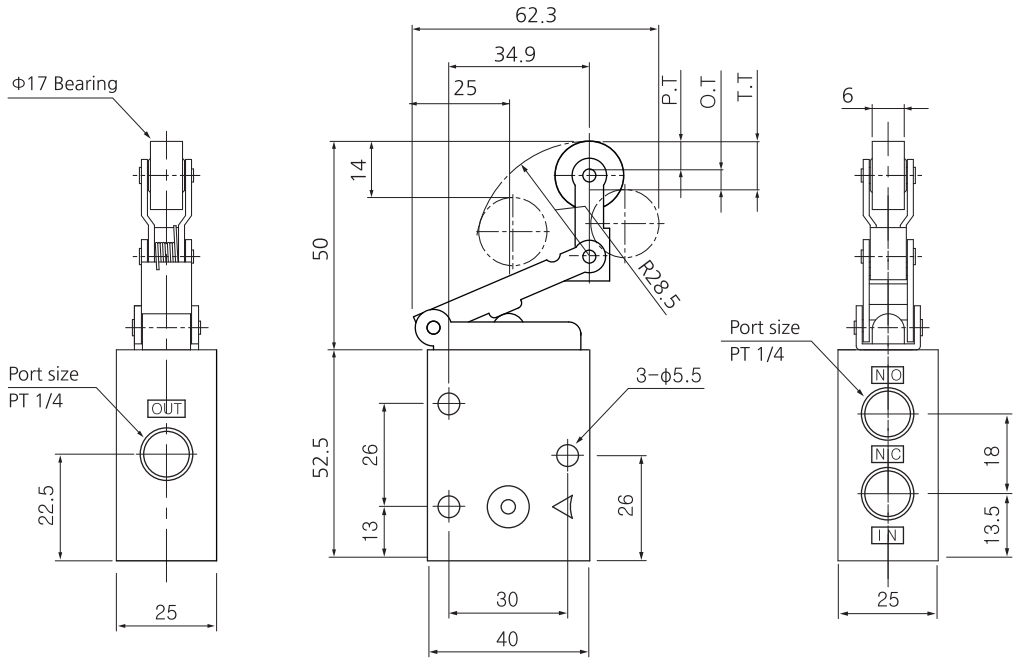

DIMENSIONS (mm)

SMVS 230-02-30

P.T.	4.9
O.T.	1.6
T.T.	6.5

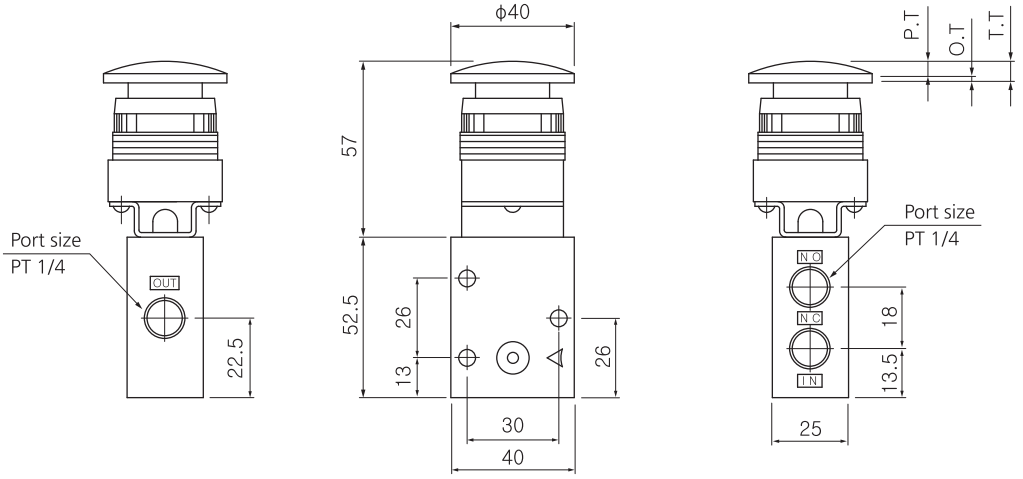

SMVS 230-02-31

T.T.	4.3

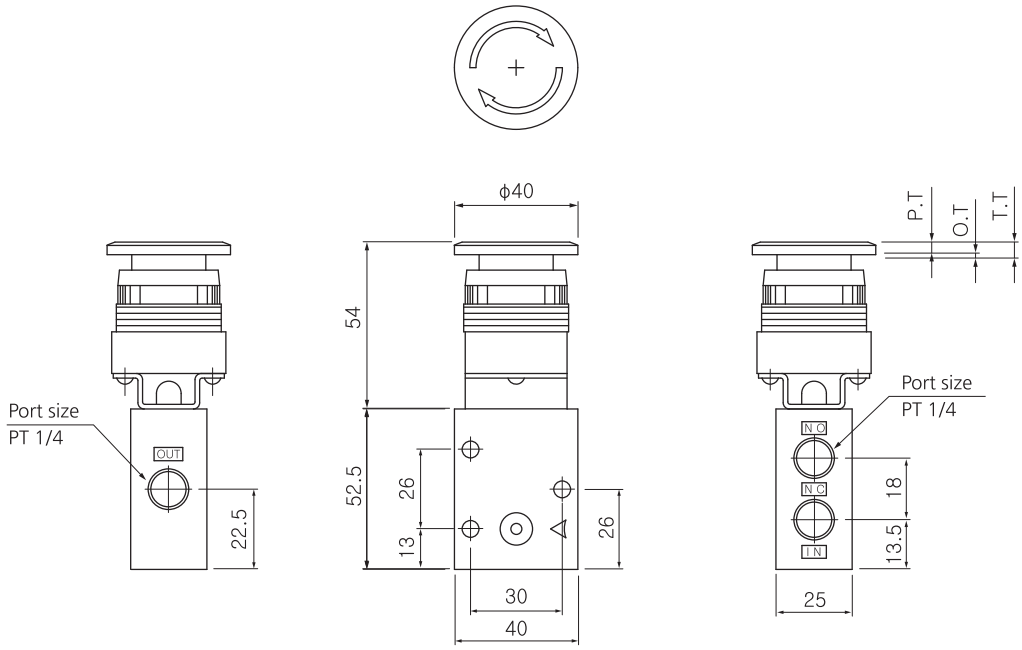

DIMENSIONS (mm)

SMVS 230-02-32

P.T.	4.9
O.T.	1.6
T.T.	6.5

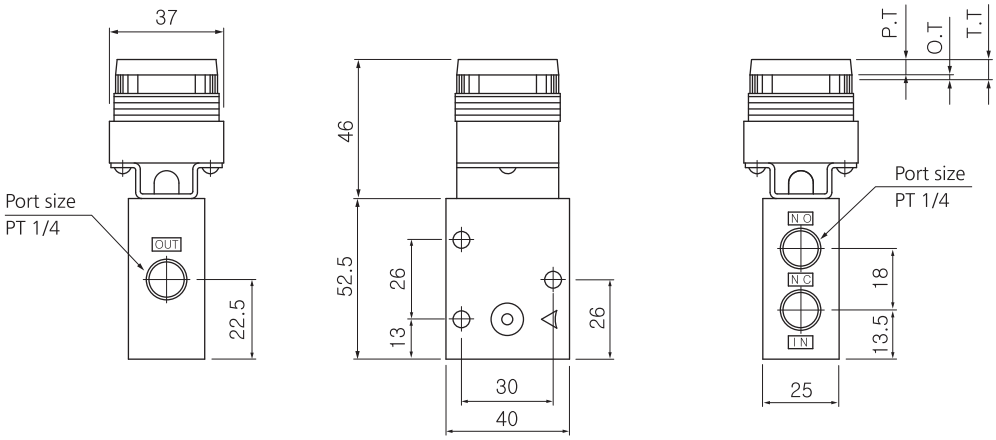

SMVS 230-02-34

T.T.	90°

